

RAM

2016

RAM TRUCK

1500

SPECIAL SERVICE SUPPLEMENT

# TABLE OF CONTENTS


| SECTION | | PAGE |
|---|---|---|
| 1 | INTRODUCTION | 3 |
| 2 | THINGS TO KNOW BEFORE STARTING YOUR VEHICLE | 5 |
| 3 | UNDERSTANDING THE FEATURES OF YOUR VEHICLE | 19 |
| 4 | UNDERSTANDING YOUR INSTRUMENT PANEL | 21 |
| 5 | MAINTAINING YOUR VEHICLE | 27 |
| 6 | INDEX | 29 |

# INTRODUCTION



## CONTENTS

■ INTRODUCTION . . . . . .4

## INTRODUCTION

This booklet is a supplement to the Owner's Manual prepared with the assistance of service and engineering specialists, and is intended to aid the operators of Special Service vehicles (used in severe duty, high-mileage operations) in understanding the operation and required maintenance procedures for such vehicles. It covers maintenance procedures for vehicles equipped with heavy-duty packages. However, other vehicles operated under the conditions listed below are also considered "severe service" vehicles, and should be serviced and maintained as prescribed in this booklet. You are urged to read this publication and the Owner's Manual carefully.

This vehicle is equipped with a Vehicle Systems Interface Module (VSIM), a 24-way connector and four additional connectors. The VSIM and connectors allow the vehicle to be upfitted with aftermarket equipment. For further information, please refer to the upfitters information.

Following the instructions and recommendations provided herein, will help assure safe and reliable operation of your vehicle. After you have read the booklet, it should be stored in the vehicle for convenient reference and remain with the vehicle when sold.

When it comes to service, remember that your authorized dealer knows your vehicle best, has factory-trained technicians and genuine MOPAR® parts, and cares about your satisfaction.

RAM is a registered trademark of FCA US LLC.

# THINGS TO KNOW BEFORE STARTING YOUR VEHICLE



## CONTENTS


■ DOOR LOCKS . . . . . .6

□ Modified Rear Door – Locks, Levers, And Window Switches — If Equipped . . . . . .6

■ OCCUPANT RESTRAINTS . . . . . .7

□ Air Bag Deployment Zones . . . . . .8

## DOOR LOCKS

### Modified Rear Door – Locks, Levers, And Window Switches — If Equipped

To provide a safer environment for riding in the rear seat, the rear doors of your vehicle have the Protection Door Lock system.

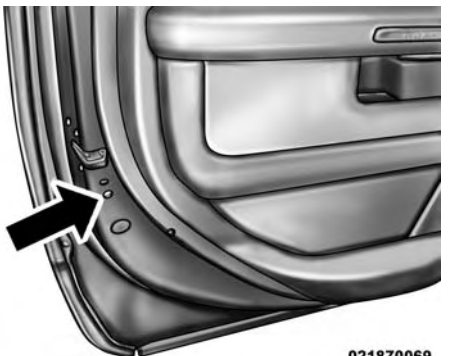


**Protection Door Lock Location**

To use the system, open each rear door, use a flat blade screwdriver (or emergency key) and rotate the dial to engage and disengage the Protection locks. When the system on a door is engaged, that door can only be opened by using the outside door handle even if the inside door lock is in the unlocked position.




**Lock Control**

**WARNING!**

**Avoid trapping anyone in a vehicle in a collision. Remember that the rear doors can only be opened from the outside when the Protection locks are engaged.**

## OCCUPANT RESTRAINTS

Driver and Passenger Advanced Front Air Bags, Supplemental Side Curtain Air Bags (SABIC), and Seat-Mounted Side Air Bags (SAB) affect the way special service equipment can be safely mounted in special service vehicles.

Any surface that could come into contact with an air bag, once it has been deployed, must not damage the air bag or alter its deployment path.

The addition of the supplemental equipment (such as radios, weapons, mounting brackets, cage, etc.), must be installed such that it will not interfere or come in contact with a deploying air bag. Air bag deployment zones are described below. Sharp edges, corners or protrusions on supplemental equipment, could damage the nylon air bag material and reduce the effectiveness of the air bag during a deployment.

**WARNING!**

- **Vehicles equipped with left and right Supplemental Side Curtain Air Bags (SABIC) must use police cages, which have been approved by the equipment manufacturer, for use in the vehicle.**
- **The area where the Supplemental Side Curtain Air Bags (SABIC) is located should remain free from any obstructions.**

*(Continued)*

**WARNING!** ***(Continued)***

- **If your vehicle is equipped with left and right Supplemental Side Curtain Air Bags (SABIC), care must be taken when installing any type of roof equipment. Drilling and installation of fasteners or other equipment that may interfere with the Supplemental Side Curtain Air Bags (SABIC) and air bag wiring harness is not permitted. Furthermore, make sure no equipment or fasteners are located in the air bag deployment zone.**
- **Do not place objects or mount equipment in front of the air bag module cover, or in front of the seat areas that may come in contact with a deploying air bag.**
- **Dash, tunnel or console mounted equipment should not be placed outside of the specified zone.**
- **Failure to follow these instructions could result in personal injury.**

### Air Bag Deployment Zones

There are four zones to be aware of:

1. Driver Air Bag Deployment Zone (Figure 1), and Driver Air Bag/Steering Wheel Specifications (Figure 2)
2. Passenger Air Bag Deployment Zone (Figure 3) and (Figure 4)
3. Supplemental Side Air Bag Inflatable Curtain (SABIC) Deployment Zone (Figure 5)
4. Supplemental Seat-Mounted Side Air Bag (SAB) Deployment Zone (Figure 6)

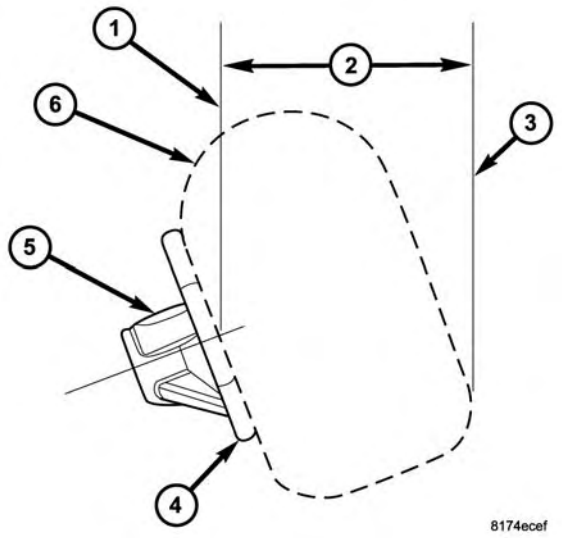


**Figure 1**

Figure 1 - Driver Air Bag Deployment Zone, depicts the following.

1. Vertical Plane Passing Through Center of Steering Wheel
2. 13 inches (330 mm)
3. Vertical Plane Passing Through Maximum Rearward Point that the Driver Air Bag Cushion Reaches
4. Steering Wheel
5. Driver Air Bag Retainer/Housing
6. Driver Air Bag Cushion

## DRIVER AIR BAG/STEERING COLUMN SPECIFICATIONS

| DRIVER AIR BAG CUSHION POSITION | |
|---|---|
| DAB Diameter When Deployed (Full) | 26 inches (661 mm) |
| DAB Depth When Deployed (Full) | 12 inches (305 mm) |
| Maximum Rearward Displacement During Deployment (Fill) | 16 inches (407 mm) |
| **STEERING COLUMN TILT POSITION RANGE** | |
| +/– 2 Degrees from Steering Column Tilt Pivot Point | |
| 22.9 Degrees from Vertical is the Nominal Position | |

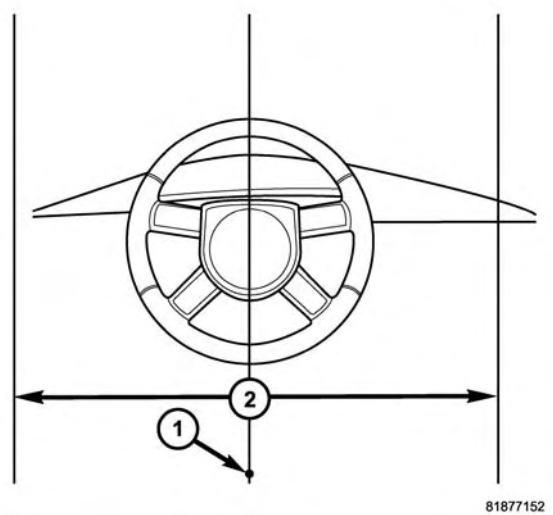


**Figure 2**

Figure 2 - Driver Air Bag Lateral Deployment Zone, depicts the following.

1. Driver Seating Reference
2. Driver Air Bag Cushion Lateral Deployment Zone, 27 inches (686 mm).

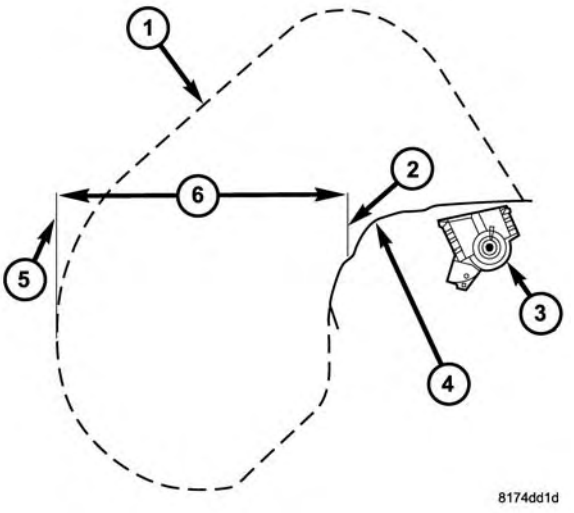


**Figure 3**

Figure 3 - Passenger Air Bag Deployment Zone, depicts the following.

1. Passenger Air Bag Cushion
2. Vertical Plane from Point of Instrument Panel
3. Passenger Air Bag Module
4. Instrument Panel
5. Vertical Plane Passing Through the Maximum Rearward Point that the Passenger Air Bag Cushion Reaches
6. 23 inches (584 mm)

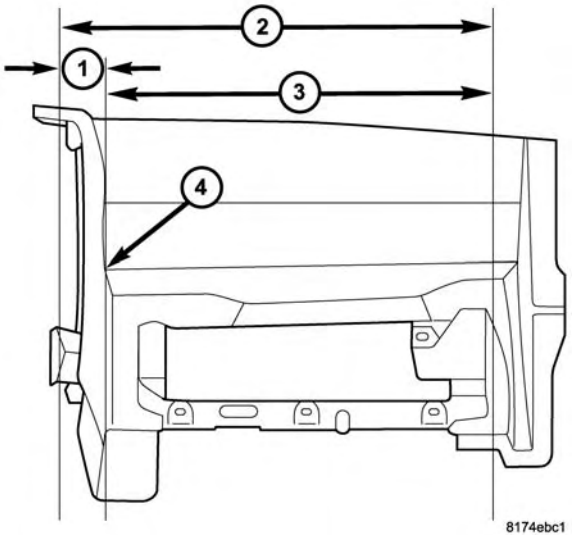


**Figure 4**

Figure 4 - Passenger Air Bag Lateral Deployment Zone, depicts the following.

1. 4.70 inches (119 mm)
2. Passenger Air Bag Cushion Deployment Zone
3. 29.8 inches (756 mm)
4. Reference Point

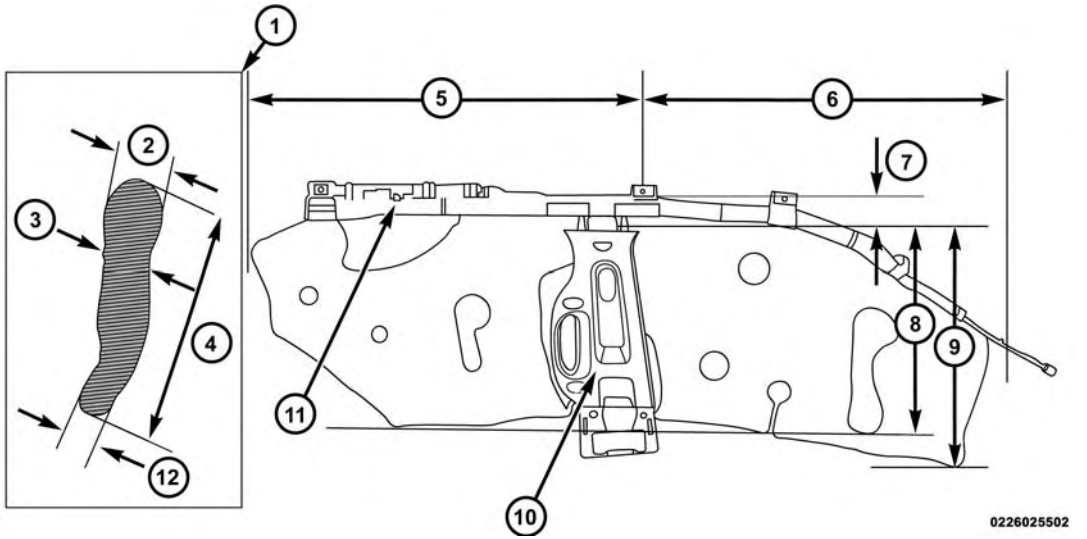


Figure 5

Figure 5 - Crew Cab Supplemental Side Air Bag Inflatable Curtain Air Bag Deployment Zone, depicts the following.

1. Cross-Sectional Area Side View
2. 4.85 inches (123 mm)
3. 4.29 inches (109 mm)
4. 19.92 inches (506 mm)
5. 36.81 inches (935 mm)
6. 34.5 inches (877 mm)
7. 3.3 inches (84 mm)
8. 16.92 inches (430 mm)
9. 22.2 inches (566 mm)
10. B-Pillar Trim
11. Side-Curtain Air Bag Inflator Module
12. 2.83 inches (72 mm)

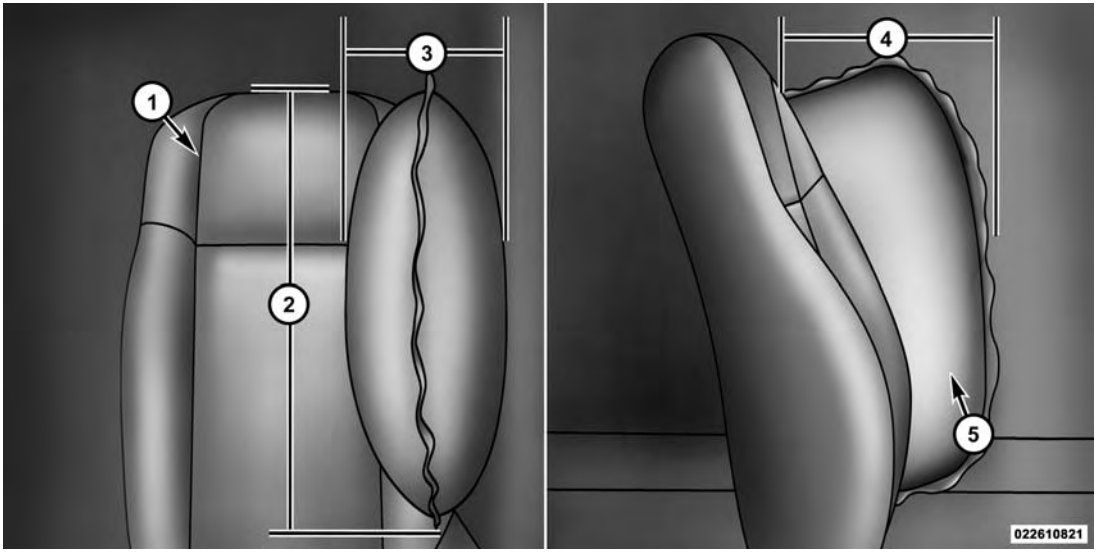


Figure 6

Figure 6 - Supplemental Seat Mounted Side Air Bag Deployment Zone, depicts the following.

1. Front Driver's Seat
2. 18.5 in (470 mm)
3. 6.3 in (160 mm)
4. 11.8 in (300 mm)
5. Seat-Mounted Air Bag

# UNDERSTANDING THE FEATURES OF YOUR VEHICLE

## CONTENTS



■ LIGHTS . . . . . .20
□ Dome Light . . . . . .20

## LIGHTS

### Dome Light

The special service dome light has three positions. Position one is used for white light, and position two is used for red LED light. Always remember to return the dome light switch to the OFF (center) position when finished using to prevent discharging the vehicle battery.

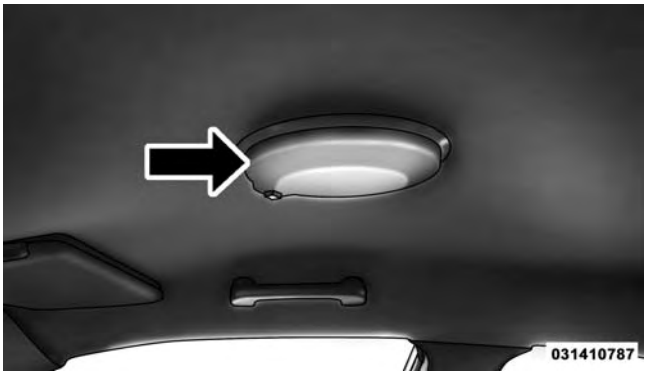


**Dome Light**

**NOTE:** If your vehicle is equipped with illuminated approach lights under the outside mirrors they can be turned off through the instrument cluster or the Uconnect radio. For further information refer to "EVIC" or "DID" and "Uconnect Settings" in "Understanding Your Instrument Panel" in your owners manual on the DVD.

# UNDERSTANDING YOUR INSTRUMENT PANEL

## CONTENTS


- ELECTRONIC VEHICLE INFORMATION CENTER (EVIC). . . . . .22
  - Vehicle Info (Customer Information Features). . .24
- DRIVER INFORMATION DISPLAY (DID) . . . . . .24
  - Vehicle Info (Customer Information Features). . .26

## ELECTRONIC VEHICLE INFORMATION CENTER (EVIC)




**Electronic Vehicle Information Center (EVIC)**

The Electronic Vehicle Information Center (EVIC) features a driver-interactive display that is located in the instrument cluster.

This system allows the driver to select a variety of useful information by pushing the switches mounted on the steering wheel. The EVIC consists of the following:

- Digital Speedometer
- Vehicle Info
- Fuel Economy Info
- Trip A
- Trip B
- Stop/Start Info (If Equipped)
- Trailer Tow
- Stored Messages
- Screen Setup
- Vehicle Settings (Not Equipped with a Uconnect 5.0 & 8.4 radio)

- Settings
- Turn Menu Off

The system allows the driver to select information by pushing the following buttons mounted on the steering wheel:




**EVIC Steering Wheels Buttons**

- *UP Arrow Button*

△ Push and release the **UP** arrow button to scroll upward through the main menu and submenus (Fuel Economy, Trip A, Trip B, Audio, Stored Messages, Screen Set Up).

- *DOWN Arrow Button*

▽ Push and release the **DOWN** arrow button to scroll downward through the main menu and submenus (Fuel Economy, Trip A, Trip B, Audio, Stored Messages, Screen Set Up).

- *RIGHT Arrow Button*

▷ Push and release the **RIGHT** arrow button to access/select the information screens or submenu screens of a main menu item. Push and hold the **RIGHT** arrow button for two seconds to reset displayed/selected features that can be reset.

- *LEFT Arrow Button*

Push the **LEFT** arrow button to return to the main menu from an info screen or submenu item.

### Vehicle Info (Customer Information Features)

Push and release the **UP** or **DOWN** arrow button until the Vehicle Info icon is highlighted in the EVIC. Push and release the **RIGHT** arrow button and Coolant Temp will be displayed. Push the **RIGHT** arrow button to scroll to the Engine Hour information submenu:

**Engine Hours**

The Engine Hours submenu will display the following:

- Idle Hours
- Drive Hours

## DRIVER INFORMATION DISPLAY (DID)

The Driver Information Display (DID) features a driver-interactive display that is located in the instrument cluster.




**Driver Information Display (DID)**

The DID Menu items consists of the following:

- Digital Speedometer
- Vehicle Info
- Fuel Economy Info
- Trip A
- Trip B
- Stop/Start Info (If Equipped)
- Trailer Tow
- Audio
- Stored Messages
- Screen Setup
- Vehicle Settings (Not Equipped with a Uconnect 5.0 & 8.4 radio)

The system allows the driver to select information by pushing the following buttons mounted on the steering wheel:




**DID Controls**

- *UP Arrow Button*

Push and release the **UP** arrow button to scroll upward through the main menu and submenus.

- *DOWN Arrow Button*

Push and release the **DOWN** arrow button to scroll downward through the main menu and submenus.

- *RIGHT Arrow Button*

Push and release the **RIGHT** arrow button to access/select the information screens or submenu screens of a main menu item. Push and hold the **RIGHT** arrow button for two seconds to reset displayed/selected features that can be reset.

- *LEFT Arrow Button*

Push and release the **LEFT** arrow button to return to the main menu from an info screen or submenu item.

### Vehicle Info (Customer Information Features)



Push and release the **UP** or **DOWN** arrow button until the Vehicle Info icon is highlighted in the DID. Push and release the **RIGHT** arrow button and Coolant Temp will be displayed. Push the **RIGHT** arrow button to scroll to the Engine Hour information submenu:

**Engine Hours**

The Engine Hours submenu will display the following:

- Idle Hours
- Drive Hours

# MAINTAINING YOUR VEHICLE

## CONTENTS

■ MAINTENANCE PROCEDURES . . . . . .28

## MAINTENANCE PROCEDURES

Special Service vehicles are equipped with heavy-duty parts that are designed specifically for the varying demands and unique requirements under which they are operated. This booklet illustrates and describes the operation of unique features and equipment that are either standard or optional on this vehicle. A description of features and equipment no longer available, or not ordered on this vehicle, may also be included. Please disregard any features and equipment described in this manual that is not on this vehicle.

Failure to maintain your vehicle properly may reduce vehicle performance and operational capabilities, adversely affect the safety of you and your passengers, as well as restrict your warranty coverage. Refer to the "Maintenance Schedule" in the Owner's Manual for the proper maintenance intervals.

The manufacturer reserves the right to make changes in design and specifications, and/or make additions to or improvements to its products, without imposing any obligation upon itself to install them on products previously manufactured.

# INDEX

Door Locks . . . . . .6

Information Center, Vehicle . . . . . .24
Introduction . . . . . .4

Lights . . . . . .20
Dome . . . . . .20

Maintenance Procedures . . . . . .28

Occupant Restraints . . . . . .7



RAM

STICK WITH THE SPECIALISTS®

16D243-226-AA
©2015 FCA US LLC. ALL RIGHTS RESERVED.
RAM IS A REGISTERED TRADEMARK OF FCA US LLC.

FIRST EDITION
PRINTED IN U.S.A.